END – TO – END SOLUTION: GEOLOGICAL SURVEY AND TRENCHING

A Case Study By Tesmec Group

Angela Latronico
Flavio Villa

TESMEC

1. Introduction

Tesmec Group at a glance

BU TRENCHERS & SURFACE MINERS

- Telecom & Fiber Optic networks, energy cables installation
- Pipelines & Utilities
- Bulk excavation, Quarries & Surface mining

BU RAILWAY

- Catenary lines construction & Maintenance
- Diagnostic vehicles and systems
- Integrated platform for safe infrastructure

BU ENERGY - STRINGING

- Solutions for power lines construction & maintenance
- Advanced methodologies for automating jobsite
- Zero emissions machines

BU ENERGY - AUTOMATION

- Telecommunications solutions for HV Grids
- Grid Management: protection and metering solutions
- Advanced sensors for fault passage indication, protection and monitoring

+70
YEARS
of experience

+1000
PEOPLE

10
MANUFACTURING PLANTS

+135
COUNTRIES
choose Tesmec

75%
EXPORT

Tesmec Trenchers & Surface Miners Business Unit

Since 1984, Tesmec is a world leader in the **design, production and supply of high-power trenchers and surface miners** for a wide range of applications, from in-line excavations to civil works, from trenching and mechanical laying of networks to surface mining and bulk excavations.

Tesmec **integrated value proposition** meet customer needs focusing on innovation, integration, glocalization and sustainability by offering a complete ESG solution. Our team of experts is always at the customer's side, and our local after-sales and spare parts service work promptly to ensure the best support in machine and project management.

Thanks to an efficient organization, flexible fleet, and local branches all over the world, Tesmec is the ideal **partner for every project and investment,** representing the **choice of contractors** working for most of the major companies worldwide.

Pipelines & Utilities

Bulk excavation

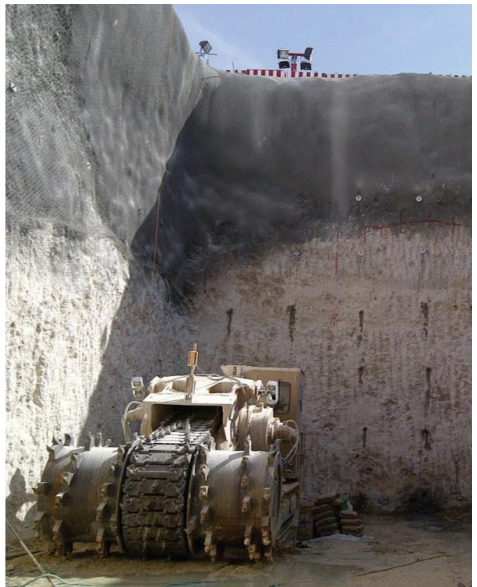

Energy cables & Renewables

Fiber optic & Telecom

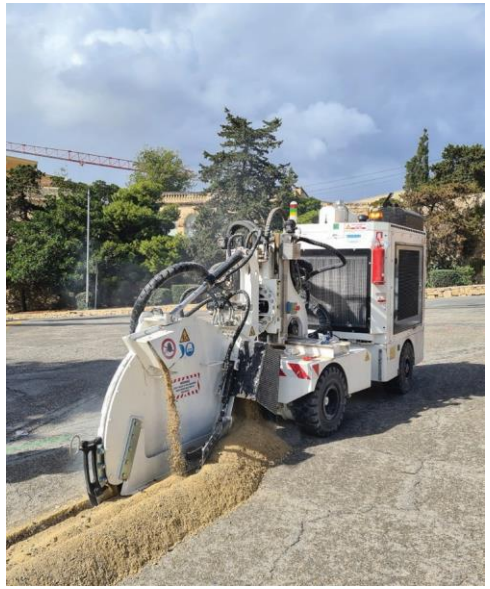

Surface mining

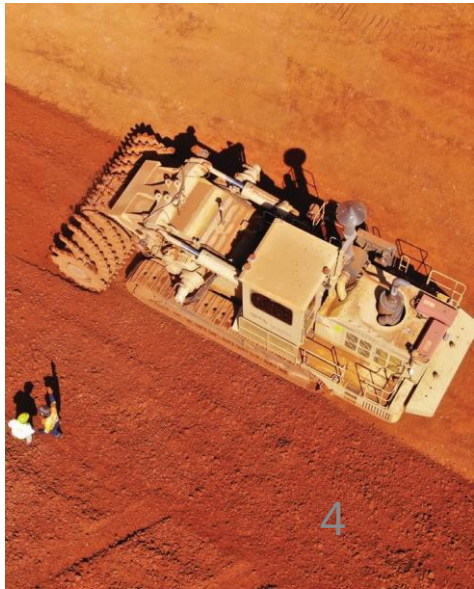

An integrated value proposition

Tesmec provides an **integrated solution** assisting the customer with a **complete offer package**, with advanced and innovative products, experienced professionals and consultancy services to meet the most specific requirements.

- Preliminary engineering and project study
- Geological and infrastructure reconstruction and digitalization
- Sales, rental and project services
- Advanced and innovative products

- State of the art technology integration
- High performance Tesmec Teeth
- Training and jobsite consultancy
- After sales and spare parts service

A Glocal approach – A worldwide presence

Tesmec S.p.A.
Grassobbio (Italy)

Tesmec USA
Alvarado, TX (USA)

Saudi Tesmec
Riyadh (Saudi Arabia)

Tesmec Peninsula
Doha (Qatar)

Tesmec Energy
Algeri, Algeria

Tesmec SA
Edenvale (South Africa)

Tesmec Guinea
Conakry (République de Guinée)

Groupe Marais
Durtal (France)

Tesmec Australia
Mount Druitt, NSW (Australia)

Marais Laying NZ
Wellington, New Zealand

Tesmec Maroc
Casablanca (Morocco)

Marais Cote D'Ivoire
Bietry (Cote D'Ivoire)

Tesmec New Technology
Beijing (China)

Local Presence – Tesmec Saudi Arabia

Vision

Contribute to build the **future landscape** of Saudi Arabia with innovative excavation solutions

Mission

Provide **customized, environmental and low carbon footprint excavation methods** for civil works, pipeline, mining solar and wind farm markets and other applications

Value proposition

To supply added-value **sustainable solutions** for our customers, with dedicated after sales and excavation service

Company share capital evolution

- Company owned 100% by historical Qatari partner of Tesmec

- Qatari partner exit the company
- Tesmec became shareholder with SAS machinery (Saudi Company)

- Tesmec increased its shares from 49% to 65%
- Increased of capital form 200.000 SAR to 30.800.000 SAR

2010

- **Establishment** of Representative office in Saudi Arabia
- **Registration** of the company with machines and service supplied for KAFD project

2012

- Set up of the **new yard** with warehouse, equipment and service vehicles
- Starting of **After Sales activities and Spare Parts Warehouse** set up to serve SAUDI market

2014-2016

- Starting of **excavation service** activities in **Riyadh Metro project**
- Consolidation of a **Tesmec trencher fleet** for Saudi Market

In 2015 big involvement of the company in Riyadh Metro project and a confirmation of our technology's plus

2021

- TESMEC becomes shareholder of Saudi Tesmec
- NEW representative office

2022

- **SAUDI TESMEC becomes officially a TESMEC GROUP COMPANY**
- **Consolidation of Service Activities**
- **Renewal and update of the fleet**
- **Expansion in mining services**

Tesmec Saudi Arabia - Team and Fleet

SAUDI TESMEC TEAM

- **Certified** operators
- **Trained** mechanics
- **Experienced** Project and Sales managers

SAUDI TESMEC TECHOLOGY

We own a fleet of Tesmec Trenchers and Surface miners

- **Certified** equipment
- **Service** vehicles
- **Mobile** workshops

2. The project

Project Overview

63.5 km pipeline in Saudi Arabia

- 40” (1016 mm) pipe

Ground conditions

- Alternation of hard rock areas (limestone) and easy sections (Marl and sand).

Use of chainsaw trencher ideal

- Very low vibrations level generated

Alternative methods

- Drilling and blasting not allowed due to the existing pipeline and other infrastructures.

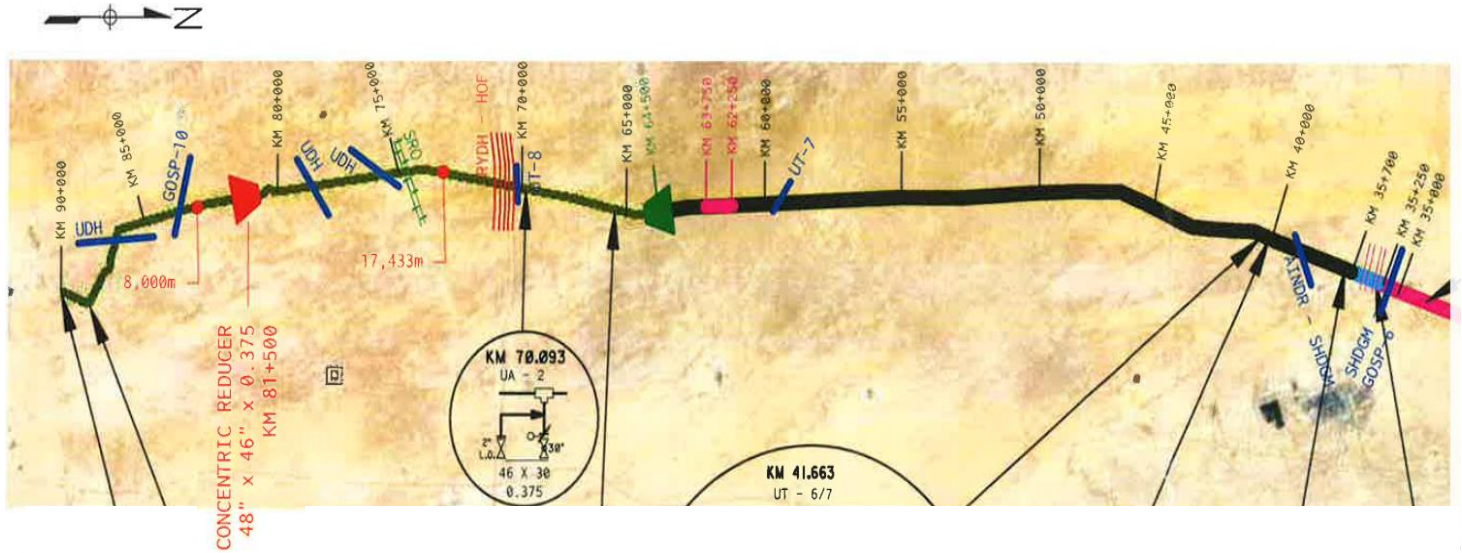

- Rocky Area
- Marl/Sandy Area

Site Survey

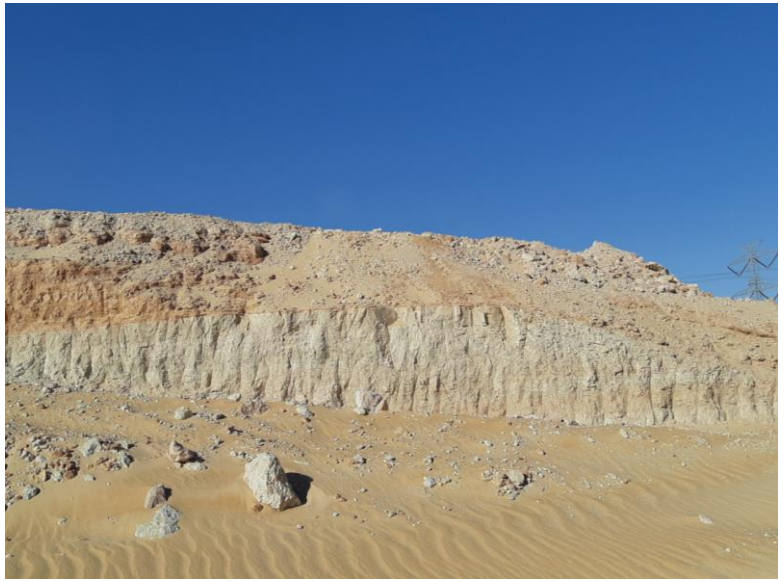

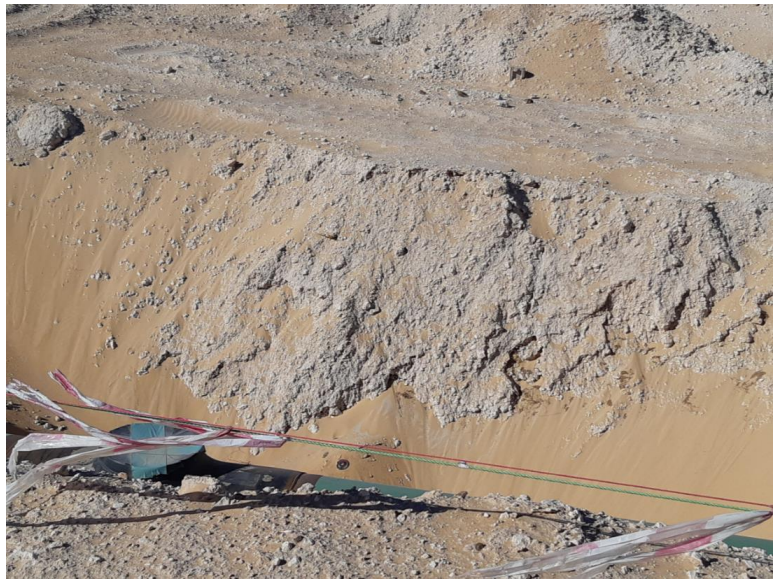

Trench Sections

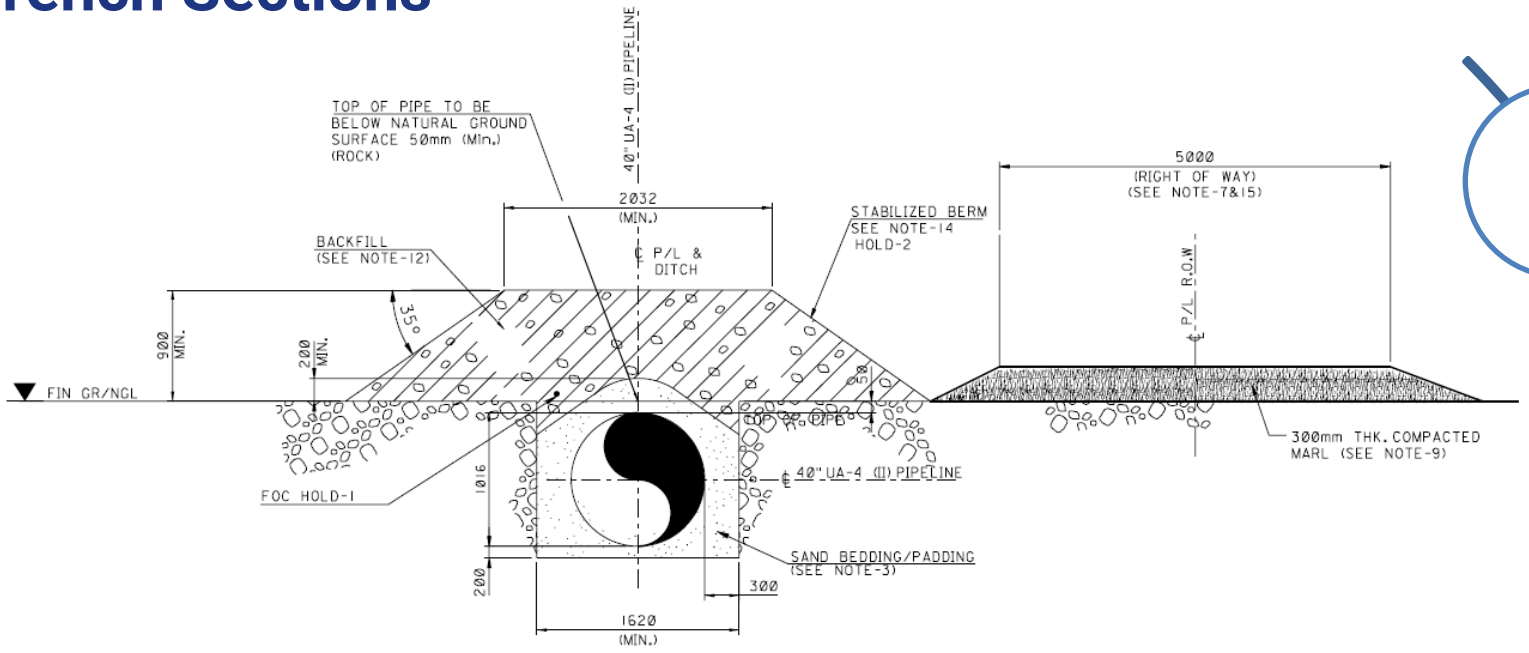

PIPELINE INSTALLATION IN ROCK

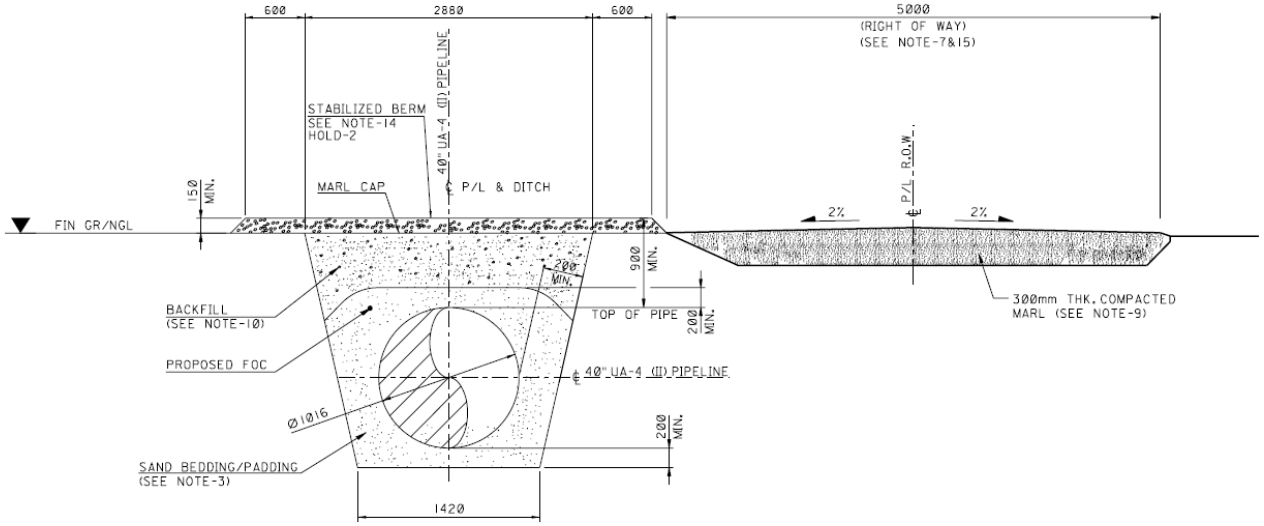

TYPICAL INSTALLATION IN SAND

40” (1016 mm) pipe

Trench width according to ground conditions. Minimum values:

- 1420 x 2110 mm in sand
- 1620 x 1267 mm in rock

Why trenchers

Use of chainsaw trencher ideal due to the very low vibrations level generated

Request of the client to minimize ground pressure to reduce the risk of damaging existing underground utilities required the use of relatively small trenchers, not suitable to excavate the full width in a single pass

The DOUBLE CUT technique was used for rocky areas, while easy sections was skipped and done by excavators.

Methodology - Double Cut

STEP #1 – Excavation of the 1st trench

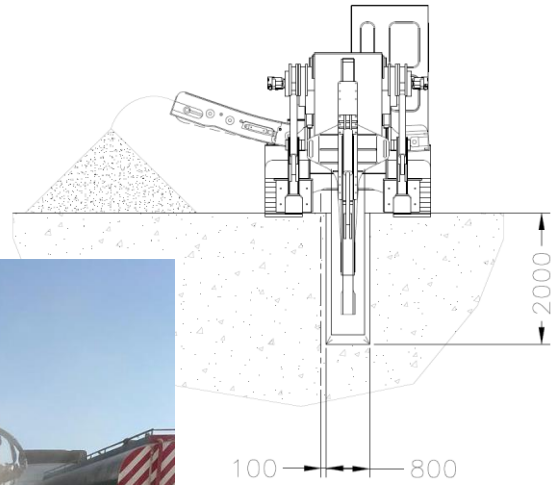

STEP #2 – Backfilling of the 1st trench with the excavated material

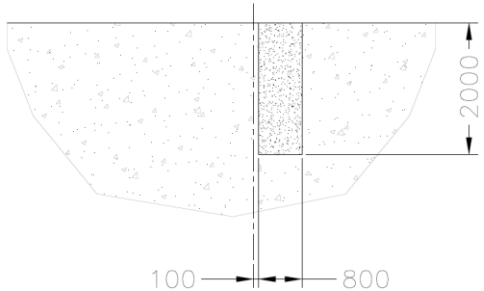

STEP #3 – Excavation of the 2nd parallel trench

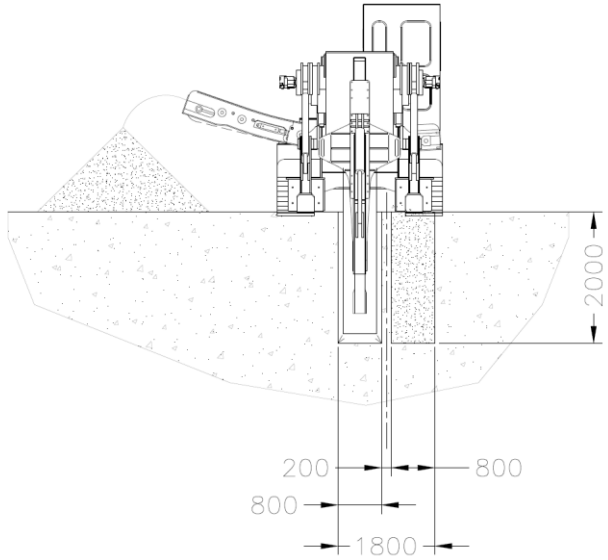

STEP #4 – Removal of the central ribbon and loose material by mean of an excavator

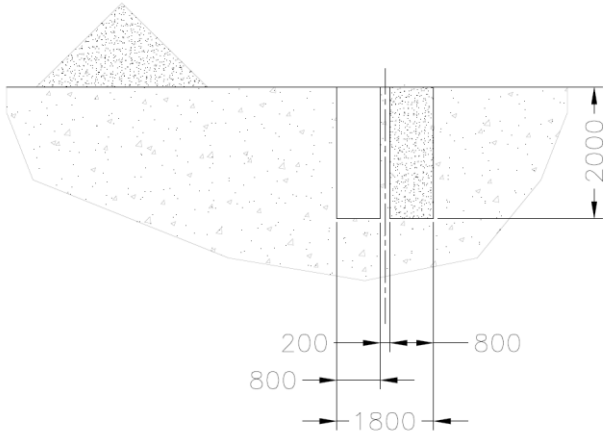

Final Trench

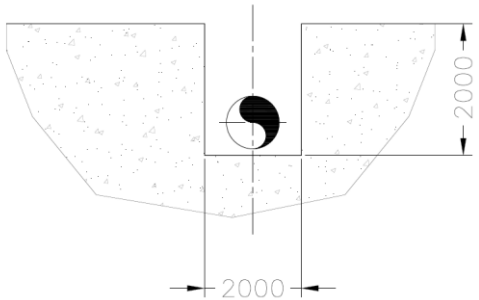

Challenges: Crossings

One of the challenges of this project was the huge number of crossings.

A total of 379 crossings in only 63.5 km was listed, included but not limited to:

- No.62 above ground pipes
- No.156 underground pipes
- No.41 underground cables
- No.1 highway
- No.5 asphalt roads
- No.33 marl roads

The Pipeline was in a corridor, therefore the maps of the existing crossing were available

To prevent accidents, the use of GPR to locate all UG utilities was requested.

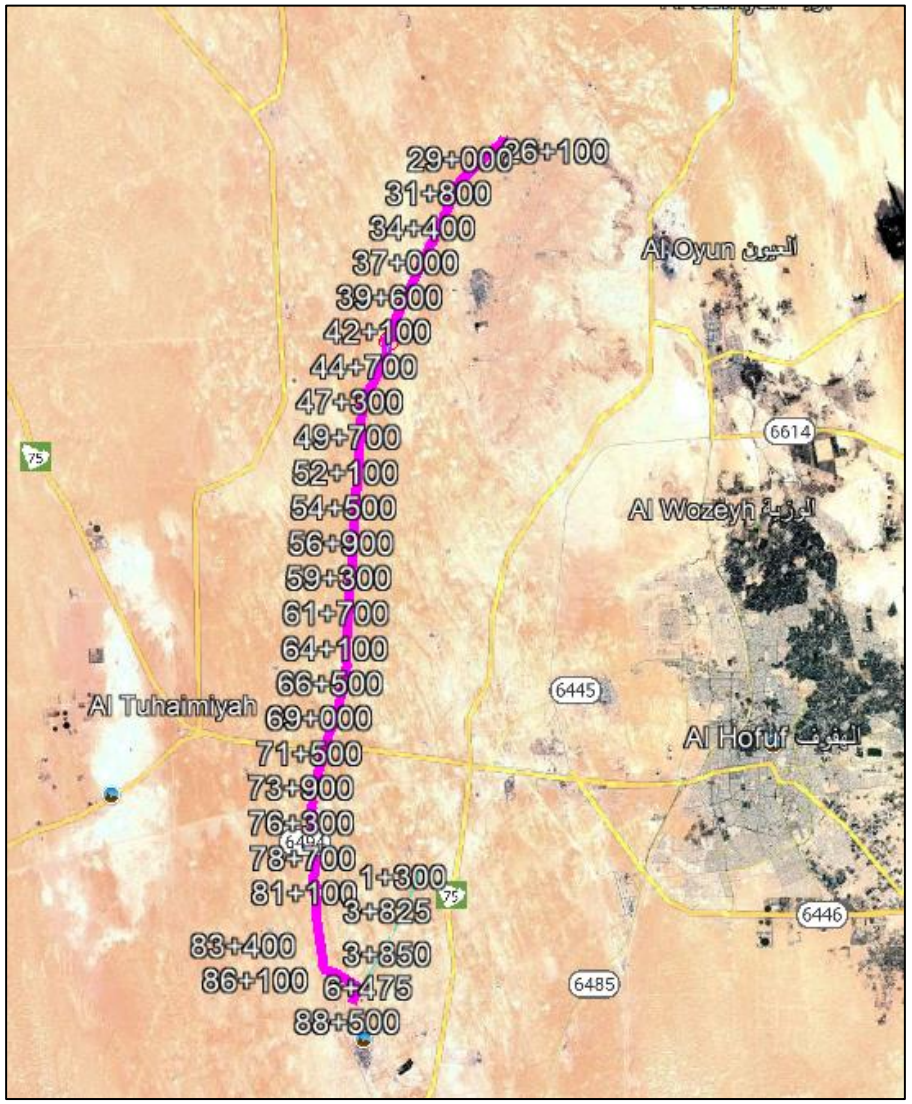

3. Project Execution

Scope of Work

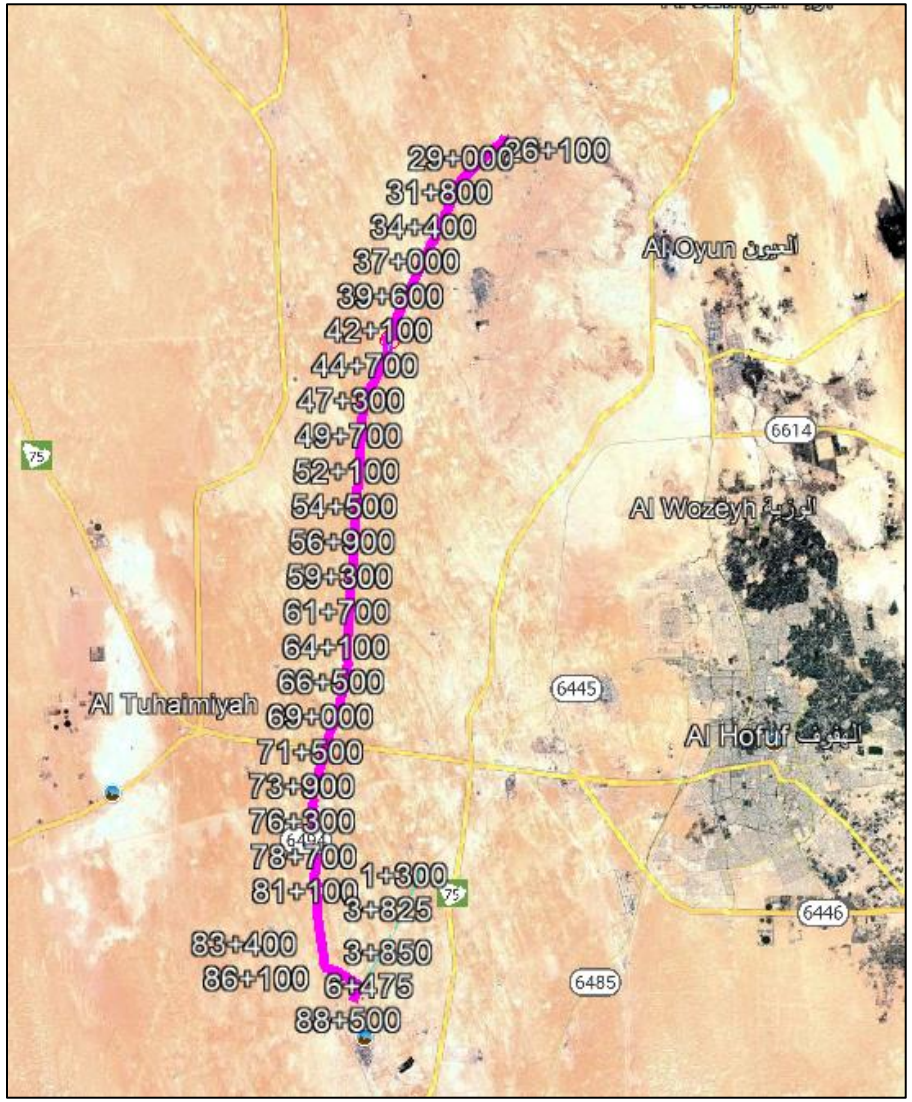

Full Service for Utilities detection services along the whole pipeline route do detect and map the underground utilities.

- GPR survey data acquisition (with differential GPS location)
- Data postprocessing
- Creation of geo-rereferred utility map

Wet Rental Services of chainsaw trenchers model 1150 (trenching width 82cm) to execute 10km of mechanical trenching in rock with double cut methodology

***The project was executed in the period between September 2022 and January 2023.

Georadar Survey – Data Acquisition

GEOLOGICAL ARRAY

- Geological Features identification and Layer reconstruction
- Frequency: 80 MHz
- Penetration: Up to 5 meters
- Acquisition Mode: Mobile, towed by a vehicle
- GPS connected for real coordinates data pairing

UTILITY ARRAY

- Utility identification along the project line
- Frequency: 600-1000 MHz
- Penetration: Up to 4 meters
- Acquisition Mode: Mobile, towed by a vehicle
- GPS connected for real coordinates data pairing

Georadar GEOLOGY Survey – Data Processing

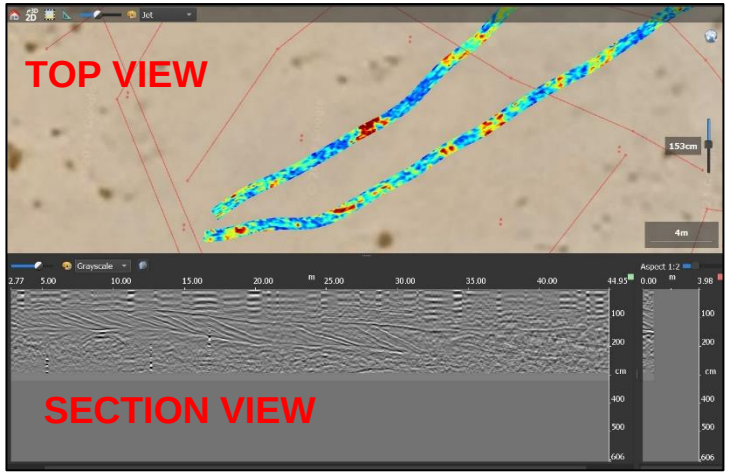

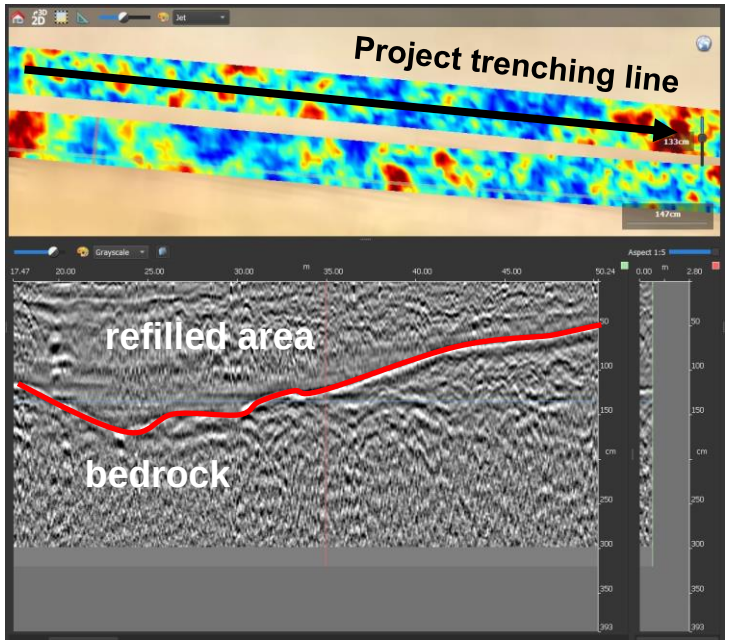

The GPR post-processing **software converts raw signal data into detailed 3D representations of subsurface features**, enabling a more accurate and comprehensive analysis of the surveyed area.

Layering activity from **geological reconstruction data processing**

Georadar GEOLOGY Survey – Data Processing

DATA PROCESSING OUTPUT

GEOLOGICAL RECONSTRUCTION

DATA CALIBRATION by Boreholes

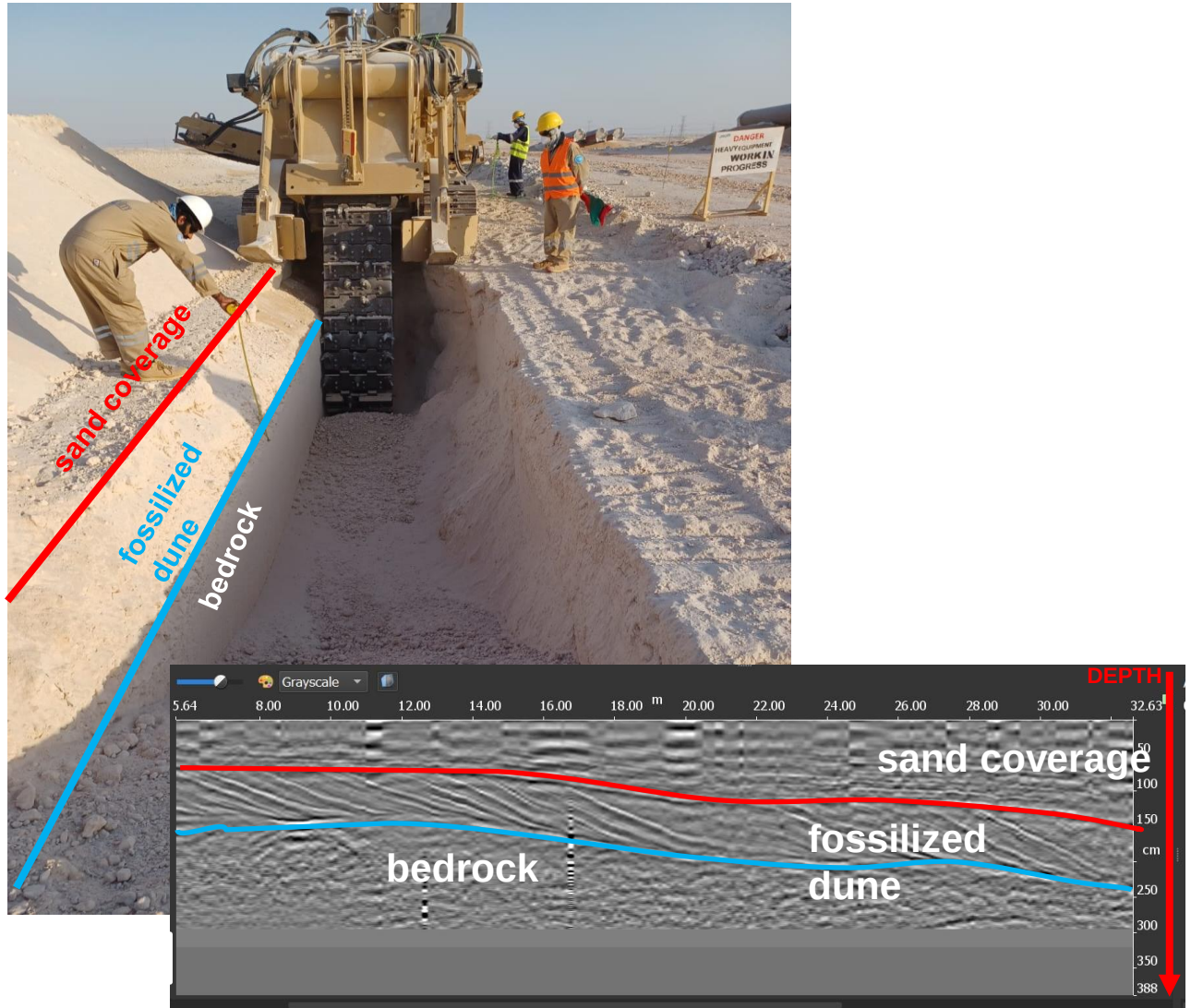

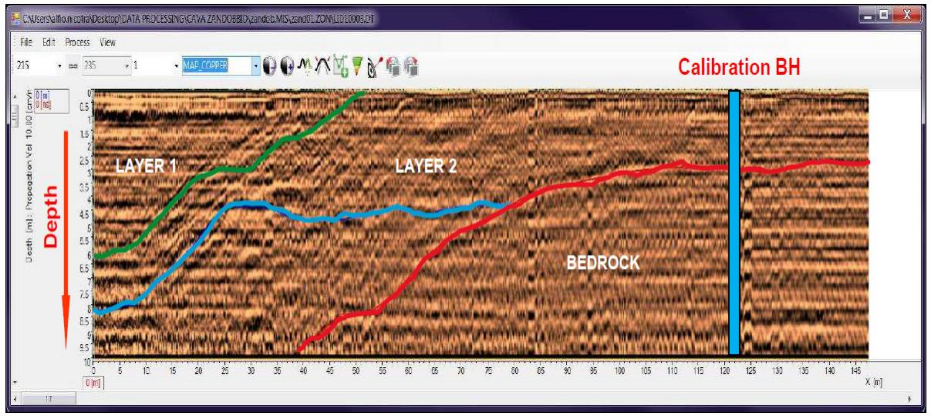

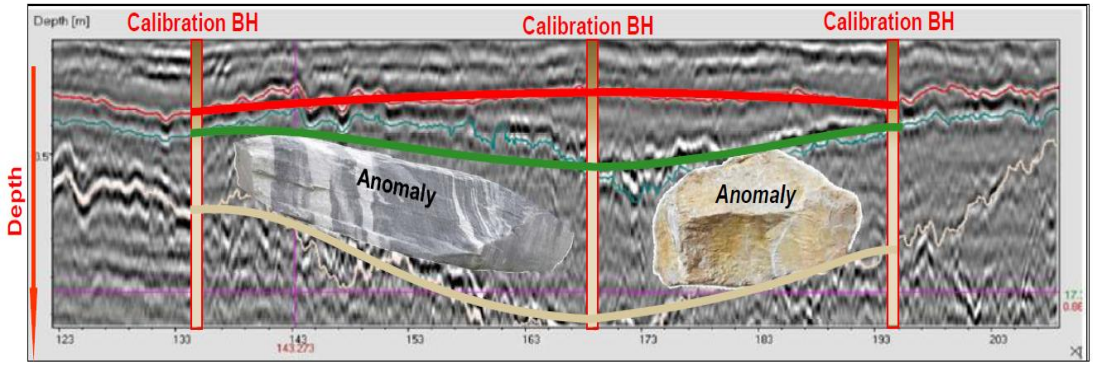

Georadar UTILITY Survey – Data Processing

COMBINED PROCESSING

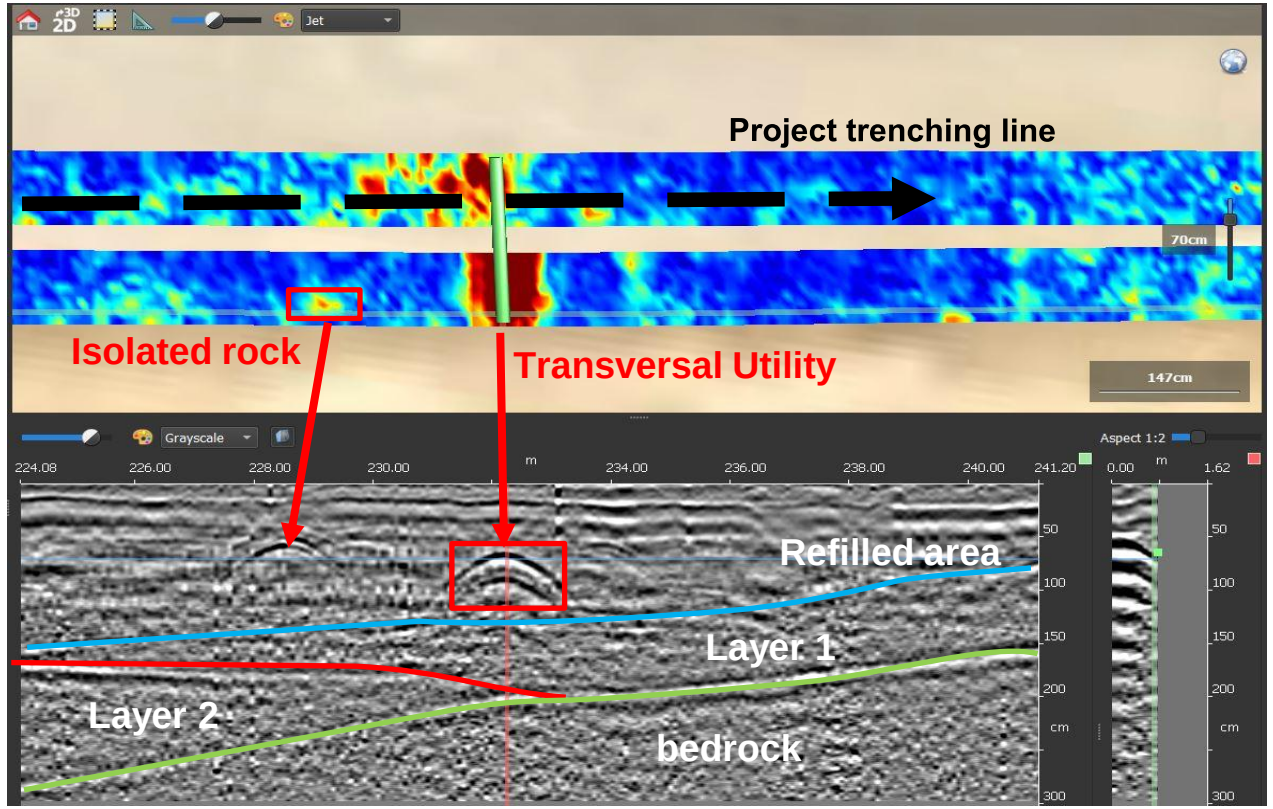

UTILITY PROCESSING

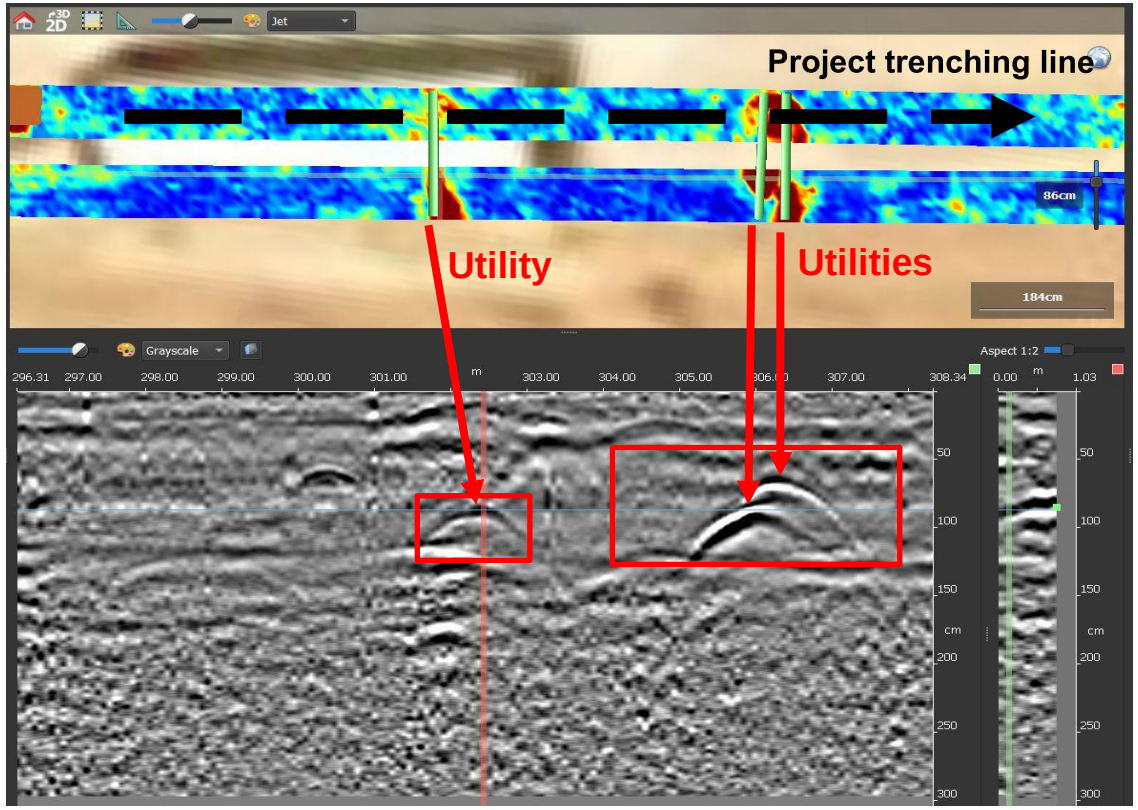

Utility Identification and Reconstruction: Utilizing GPR Anomaly Correlation, the post-processing software enables **precise identification of cables, pipes, and isolated objects, determining their exact position and depth.** The system provides real-world coordinates, including North-East positioning and elevation, ensuring **accurate spatial mapping** of subsurface utilities.

Georadar UTILITY Survey – OUTPUT

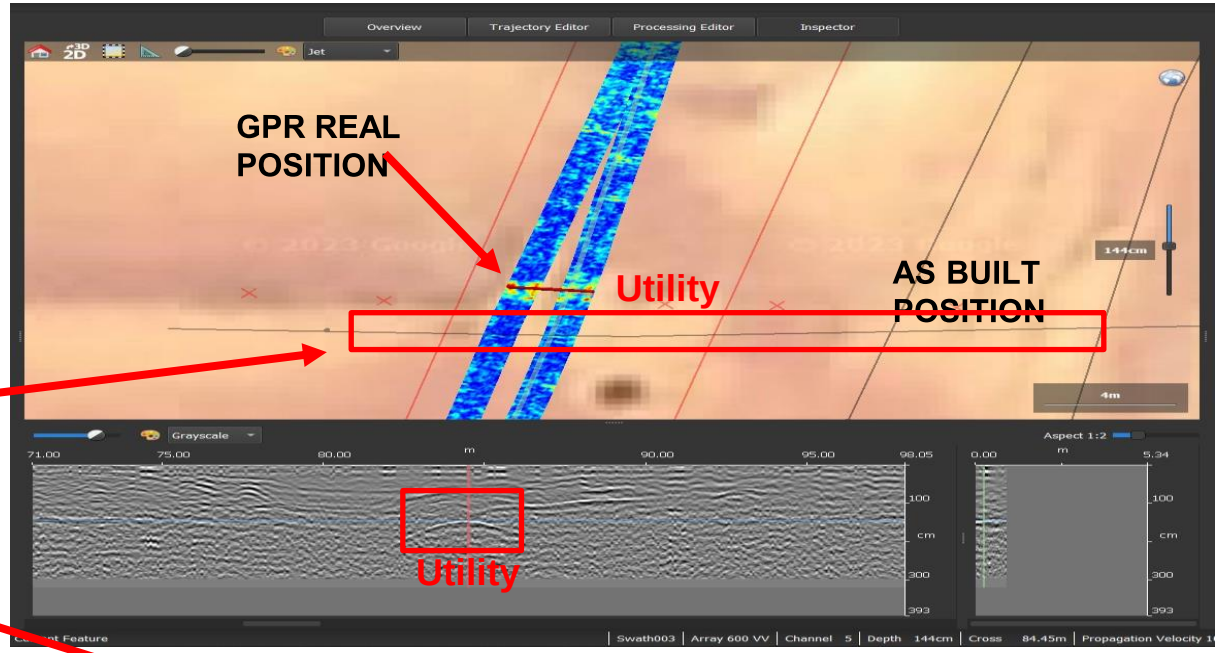

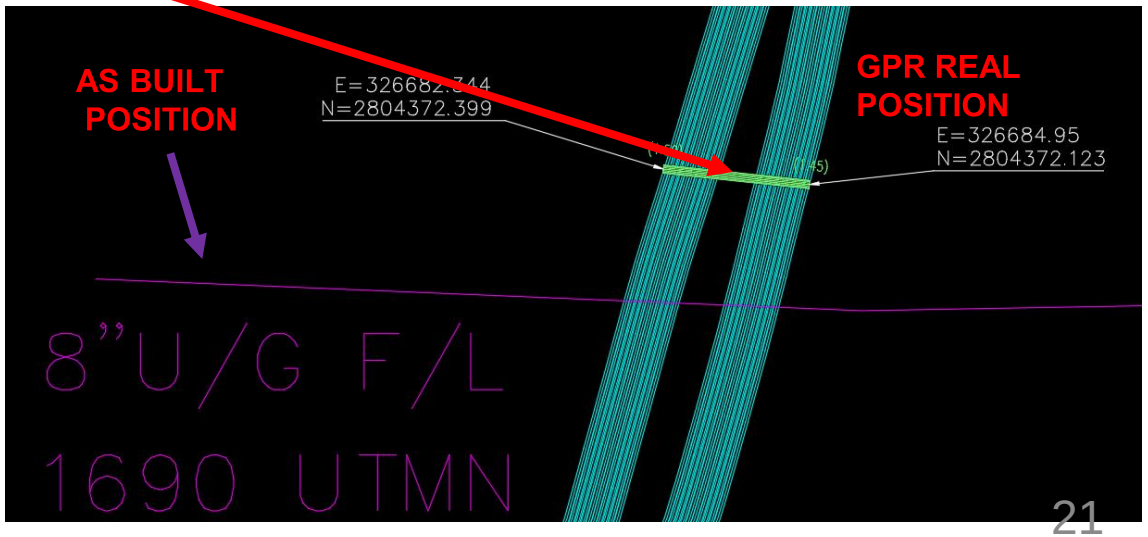

Output:

A utility drawing in AutoCAD (.dwg) format with accurate real-world coordinates. The as-built position of the utility crossing the project line was found to be 7 meters away from the actual location identified by the GPR survey.

Mechanical Trenching Works

Trenching works started on Oct 15, 2022 and were completed on Jan 29, 2023.

Expected daily production for 40” pipeline:

- 210 m/day in sand & marl sections
- 82 m/day in rocky sections

Job site regulations were very strict.

Overall performances of the trenchers good and according to the expectations, in spite of the fact that every day several hours were wasted waiting for work permits signed by the final client.

Tesmec advantages

End-To-End Solution

- We offer a package which helps you to do an underground mapping of the area of work and the trenching operation

Productivity

- One trencher can outperform a fleet of traditional machines, making your projects faster and more efficient. Achieve high performances in all rock conditions, including long-distance projects even in the most challenging conditions.

Quality and accuracy

- Thanks to Tesmec technology, it is possible to achieve a high quality, uniform trench with constant depth and width, smooth bottom and vertical flat walls.

Excavated material

- The excavated material left by the trencher is immediately ready to be handle with a screen to prepare the trench for sand bedding, padding or backfilling according to the necessity, avoiding double handling and extra costs.

Overall cost reduction

- Simplify your operations and reduce costs with our trenching technology. Fewer machines and manpower are required, leading to lower logistics expenses, lower fuel costs, and easier site management

Safety & Sustainability

- Ensure safer operations, minimizing people and equipment on site. By using our machines and methodology, you'll reduce CO2 emissions and fuel consumption, as well as limited disturbance.

Traceability

- Stay in control of your projects with real-time traceability and georeferenced data of the excavated trenches, and successfully manage your site operations.

TESMEC

Bringing it all together - Key Takeaways

Chainsaw trenchers can be the ideal solution for trenching very close to existing utilities (pipeline corridors) since the induced vibrations are negligible.

GPR survey with differential GPS can give very accurate information about underground utility location. This can reduce costs and minimize the risk of expensive accidents.

GPR geological survey can be a valuable tool to accurately map the geology along the pipeline route, preventing costly delays and cost increases.

- In this specific case, a quite detailed geological map was available.
- In general, this is not the case therefore the utilization of a GPS geological survey + a few boheholes logs can provide a very accurate information about the depth to rock and the presence of difficult sections that might (for instance) be excavated in advance with no risk of delay of the whole project.

Relatively small trenchers in combination with excavators can be used to effectively excavate wide pipelines trenches.

Q&A

TESMEC

draw the way forward